HOLMAN

PRO469

3RD GENERATION

MULTI-PROGRAM IRRIGATION CONTROLLER

www.holmanindustries.com.au

User Guide

Contents

Introduction 3
- Correct Power-up Procedure 3

Features 3
Overview 4
Programming 5
- Set Automatic Program 5
- Set Current Time, Day and Date 5
- Set Start Times 6
- Set Watering Days 6
- Set Run Times 7
- Set Additional Programs 7

Manual Operation 8
- Run a Single Station 8
- Edit the Default Manual Run Time 8
- Run a Program 8
- Stacking Programs 8

Other Features 9
- Stop Watering 9
- Stacking Start Times 9
- Automatic Backup 9
- Rain Sensor 9
- Rain Delay 10
- Dual Pump Selection 10
- Display Contrast 10
- Water Budgeting and Seasonal Adjustment 10
- Fault Indication Feature 11
- System Test 11
- Clearing the Programs 11
- Program Rescue Feature 11

Installation 12
- Mounting the Controller 12
- Electrical Hook-up 12
- Field Wiring Connections 12
- Power Supply Connections 12
- Terminal Block Layout 13
- Valve Installation and Power Supply Connection 13
- Station Valve Installation 14
- Pump Start Relay Connection 15
- Pump Protection (System Test) 15
- Single Phase Pump Installation 15

Troubleshooting 16
Electrical Specifications 17
- Electrical Outputs 17
- Overload Protection 17
- Power Failure 17
- Wiring 17

Servicing 18
- Servicing your Controller 18

Warranty 19

Introduction

Your ***PRO469 Multi-Program Irrigation Controller*** is available in 6 and 9 station configurations. Designed to cover a wide range of applications from residential and commercial turf, to light agriculture, and professional nursery.

This controller has a possible 3 separate programs with up to 12 starts per day. The controller has a 7 day watering schedule with individual day selection per program or a 365 calendar for odd/even day watering or selectable interval watering schedules from every day to every 15th day. Individual stations can be allocated to one or all programs and can have a run time of 1 minute to 12 hours 59 minutes or 25 hours if the water budget is set to 200%. Now with “Water Smart Seasonal Set” which allows the automatic run times to be adjusted in percentage from “OFF” to 200% per month.

We have always been concerned with sustainable water usage. The controller has many water saving features that can be used to maintain the highest standard of plant quality with the least amount of water consumption. The integrated budget facility allows global changes of run times without affecting programmed run times. This allows for decreasing total water consumption on days of minimal evaporation.

Correct Power-up Procedure

1. Connect to AC Power
2. Install a 9V battery to increase the life of the coin battery

ⓘ Batteries will maintain the clock

Features

- 6 and 9 station models
- Toroidal high capacity transformer rated to 1.25AMP (30VA)
- Outdoor model with an inbuilt transformer includes lead and plug, for Australia
- 3 programs, each of which has 4 start times, maximum of 12 start times per day
- Station run times from 1 minute to 12 hours and 59 minutes
- Selectable watering options: Individual 7 day selection, Even, Odd, Odd -31, interval watering day selection from every day to every 15th day
- Watering budgeting feature allows quick adjustment of the station run times by percentage, from **OFF** to **200%**, by month
- Rain sensor input will turn off all stations or selected stations during wet periods, if a sensor is installed
- Permanent memory feature will retain automatic programs during power failures
- Manual functions: run a program or group of programs once, run a single station, with a test cycle for all stations, **OFF** position to stop a watering cycle or to stop automatic programs during winter
- Pump output to drive a 24VAC coil
- Real-time clock backed up with 3V Lithium battery (pre-fitted)
- Contractor recall feature

Overview

1. LCD display
2. ◀
3. ➕
4. ➖
5. ▶
6. Ⓟ
7. **MAIN DIAL**
8. **SENSOR** switch
9. Terminal cover

Programming

This controller has been designed with 3 separate programs to allow different landscape areas to have their own individual watering schedules

A **PROGRAM** is a method of grouping stations (valves) with similar watering requirements to water on the same days. These stations will water in sequential order and on the days selected.

- Group the stations (valves) which are watering similar landscape areas together. For example, turf, flower beds, gardens–these different groups may require individual watering schedules, or **PROGRAMS**
- Set the current time and correct day of the week. If odd or even day watering is going to be used, make sure the current year, month and day of the month is correct
- To select a different **PROGRAM**, press P. Each press will move to the next **PROGRAM** number. This is handy for quick reviewing of previously entered information without losing your place in the programming cycle

Set Automatic Program

Set the automatic **PROGRAM** for each group of stations (valves) by completing the following three steps:

1. Set watering **START TIMES**

- For each start time, all the stations (valves) selected for the **PROGRAM** will come on in sequential order. If two start times are set, the stations (valves) will come on twice

2. Set **WATER DAYS**
3. Set **RUN TIME** durations

This controller has been designed for quick intuitive programming. Remember these simple tips for hassle free programming:

- One push of a button will increment one unit
- Holding a button down will fast scroll through units
- During the programming, only flashing units are able to be set
- Adjust flashing units using + or −
- Press ◀ or ▶ to scroll through settings as desired
- The **MAIN DIAL** is the primary device for selecting an operation
- Press P to select different **PROGRAMS**. Each push on this button will increment one **PROGRAM** number

Set Current Time, Day and Date

1. Turn the dial to **DATE+TIME**
2. Use + or − to adjust the flashing *minutes*
3. Press ▶ and then use + or − to adjust the flashing *hours*

- AM/PM must be set correctly.

4. Press ▶ and then use + or − to adjust the flashing *days of the week*
5. Press ◀ repeatedly until the calendar date appears on the display with the *year* flashing

- The calendar only needs to be set when selecting odd/even day watering

6. Use + or − to adjust the *year*
7. Press ◀ and then use + or − to adjust the flashing *month*
8. Press ◀ and then use + or − to adjust the flashing *date*

- To return to the clock, turn the dial back to **AUTO**

Programming (continued)

Set Start Times

- All stations will run in sequential order for each start time
- For this example, we will set a **START TIME** for **PROG No. 1**

1. Turn the dial to **START TIMES** and ensure that **PROG No. 1** is showing

- If not, press P to cycle through the **PROGRAMS** and select **PROG No. 1**

2. **START No.** will be flashing
3. Use + or − to change the **START No.** if required
4. Press ▶ and the *hours* for your selected **START No.** will flash
5. Use + or − to adjust if required

- Ensure **AM/PM** is correct

6. Press ▶ and the *minutes* will flash
7. Use + or − to adjust if required

- Each **PROGRAM** can have up to 4 **START TIMES**

8. To set an additional **START TIME**, press ▶ and **START No. 1** will flash
9. Advance to **START No. 2** by pressing +
10. Follow steps 4-7 above to set a START TIME for **START No. 2**

- To enable or disable a **START TIME**, use + or − to set both the *hours* and *minutes* to zero
- To cycle through and change **PROGRAMS**, press P repeatedly

Set Watering Days

- This unit has individual day, **EVEN/ODD** date, **ODD-31** date and **INTERVAL DAYS** selection

Individual Day Selection:

- Turn dial to **WATER DAYS** and **PROG No. 1** will show

11. If not, use P to select **PROG No. 1**
12. **MON** (Monday) will be flashing
13. Use + or − to enable or disable watering for Monday respectively
14. Use ◀ or ▶ to cycle through the days of the week

- Active days will be shown with ◆ underneath

ODD/EVEN Date Selection

- Some regions only allow watering on odd dates if the house number is odd, or likewise for even dates
- Turn dial to **WATER DAYS** and **PROG No. 1** will show

15. Press ▶ repeatedly to cycle past **FRI** until **ODD DAYS** or **EVEN DAYS** is showing accordingly

- Press ▶ again for **ODD-31** if necessary
- The 365-day calendar must be set correctly for this feature, (see ***Set Current Time, Day and Date***)
- This controller will take leap years into account

Interval Day Selection

1. Turn dial to **WATER DAYS** and **PROG No. 1** will show
2. Press ▶ repeatedly to cycle past **FRI** until **INTERVAL DAYS** is showing accordingly

- **INTERVAL DAYS 1** will be flashing
- Use + or − to select from 1 to 15 day intervals
- ***Example:*** **INTERVAL DAYS 2** means the controller will run the program in 2 days time
- The next active day is always changed to 1, meaning tomorrow is the first active day to run

Programming (continued)

Set Run Times

- This is the length of time that each station (valve) is scheduled to water on a particular program
- Maximum watering time is 12 hours 59 minutes for each station
- A station can be assigned to any or all of the possible 3 programs

1. Turn the dial to **RUN TIMES**

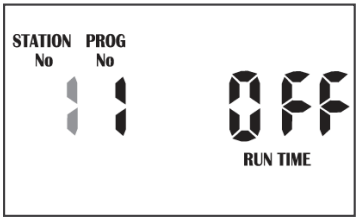

- **STATION No. 1** will be flashing labelled as **OFF**, as shown above, meaning it has no **RUN TIME** programmed in it
- The controller has permanent memory so when there is a power failure, even if the battery is not installed, the programmed values will be restored to the unit

2. Press ⊞ or ⊟ to select the station (valve) number
3. Press ▶ and **OFF** will flash
4. Press ⊞ or ⊟ to adjust the **RUN TIME** *minutes* as desired
5. Press ▶ and the **RUN TIME** *hours* will flash
6. Press ⊞ or ⊟ to adjust the **RUN TIME** *hours* as desired
7. Press ▶ and the **STATION No.** will flash again
8. Press ⊞ or ⊟ to select another station (valve), and repeat steps 2-7 above to set a **RUN TIME**

- To turn a station **OFF**, set both the *hours* and *minutes* to 0, and the display will flash **OFF** as shown above
- This completes the setup procedure for **PROG No. 1**

Set Additional Programs

- Set schedules for up to 6 **PROGRAMS** by pressing Ⓟ when setting up **START TIMES**, **WATERING DAYS** and **RUN TIMES** as previously outlined
- Although the controller will run automatic programs with the **MAIN DIAL** in any position (with the exception of **OFF**), we recommend to leaving the main dial on **AUTO** position when not programming or running manually

Manual Operation

Run a Single Station

- The maximum run time is 12 hours 59 minutes
1. Turn the dial to **RUN STATION**
- **STATION No. 1** will be flashing
- The default manual run time is 10 minutes–to edit this, see ***Edit the Default Manual Run Time*** below
2. Use ⊞ or ⊟ to select the desired station
- The selected station will start running and the **RUN TIME** will decrease accordingly
- If there is a pump or master valve connected, **PUMP A** will be shown in the display, indicating the pump/master is active
3. Press ▶ and the **RUN TIME** *minutes* will flash
4. Use ⊞ or ⊟ to adjust the *minutes*
5. Press ▶ and the **RUN TIME** *hours* will flash
6. Use ⊞ or ⊟ to adjust the *hours*
- The unit will revert to **AUTO** after the time has lapsed
- If you forget to turn the dial back to **AUTO**, the controller will still run programs
7. To stop watering immediately, turn the dial to **OFF**

Edit the Default Manual Run Time

1. Turn the dial to **RUN STATION**
- STATION No. 1 will flash
2. Press ▶ and the **RUN TIME** *minutes* will flash
3. Use ⊞ or ⊟ to adjust the **RUN TIME** *minutes*
4. Press ▶ and the default **RUN TIME** *hours* will flash
5. Use ⊞ or ⊟ to adjust the **RUN TIME** *hours*
6. Once the desired **RUN TIME** is set, press Ⓟ to save this as the default manual **RUN TIME**
- The new default will now always appear when the dial is turned to **RUN STATION**

Run a Program

1. To manually run a complete program or to stack multiple programs to run, turn the dial to **RUN PROGRAM**
- **OFF** will flash on the display
2. To enable a **PROGRAM**, press ⊞ and the display will change to **ON**
- If no **RUN TIME** has been set for the desired **PROGRAM**, the above step will not work
3. To run the desired **PROGRAM** immediately, press ▶

Stacking Programs

- There may be times when it is desirable to run more than one program manually
- The controller allows this to occur using its unique facility of enabling a program, before running it
- For example, to run **PROG No. 1** and also **PROG No. 2**, the controller will manage stacking of the programs so they do not overlap
1. Follow steps 1 and 2 of ***Run a Program*** to enable a single **PROGRAM**
2. To select the next **PROGRAM** press **P**
3. Enable the next **PROGRAM** by pressing ⊞
- To disable a program number, press ⊟
4. Repeat steps 2-3 above to enable additional **PROGRAMS**
5. Once all desired **PROGRAMS** have been enabled, they can be run by pressing ▶
- The controller will now run all **PROGRAMS** that have been enabled in sequential order
- This method can be used to enable any, or all of the available programs on the controller.
- When running programs in this mode the **BUDGET %** will alter the **RUN TIMES** of each individual station accordingly

Other Features

Stop Watering

- To stop an automatic or manual watering schedule, turn the dial to **OFF**
- For automatic watering remember to turn the dial back to **AUTO**, as **OFF** will stop any future watering cycles from occurring

Stacking Start Times

- Should you accidentally set the same **START TIME** on more than one **PROGRAM**, the controller will stack them in sequential order
- All programmed **START TIMES** will be watered from the highest number first

Automatic Backup

- This product is fitted with permanent memory. This allows the controller to hold all stowed values even in the absence of power sources, which means that programmed information will never be lost
- Fitting a 9V battery is recommended to extend the life of the coin battery but it will not provide sufficient power run the display
- If the battery is not fitted, the real time clock is backed up with a lithium coin battery that has been factory fitted–when the power returns the clock will be restored to the current time
- It is recommended that the 9V battery is fitted and it is changed every 12 months
- The display will show FAULT BAT in the display when the battery has a week left to run–when this occurs, replace the battery as soon as possible
- If the AC power is off, the display will not be visible

Rain Sensor

1. When installing a rain sensor, first remove the factory fitted link between the **C** and **R** terminals as shown

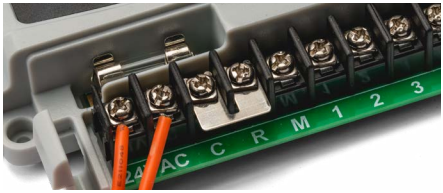

2. Replace with the two wires from the rain sensor into these terminals, polarity NOT required
3. Toggle the **SENSOR** switch to **ON**
4. Turn the dial to **SENSOR** to enable your rain sensor for individual stations

- The default mode is **ON** for all stations
- If a station is labelled **ON** on the display, this means your rain sensor will be able to control the valve in the instance of rain
- Should you have a station that always needs to be watered, (such as an enclosed greenhouse, or plants that are under cover) the rain sensor can be turned **OFF** to continue watering during rainy conditions

5. To turn a station **OFF**, press ▶ to cycle through and select the desired station, then press ⊖
6. To toggle a station back **ON**, press ⊕

- To disable the rain sensor and allow all stations to water, toggle the **SENSOR** switch to **OFF**

WARNING!

KEEP NEW OR USED BUTTON/COIN BATTERIES OUT OF REACH OF CHILDREN

The battery can cause severe or fatal injuries in 2 hours or less if it is swallowed or placed inside any part of the body. If you think batteries may have been swallowed or placed inside any part of the body, seek immediate medical attention

Contact the **Australian Poisons Information Centre** for 24/7 fast, expert advice: **13 11 26**

Refer to your local government guidelines on how to correctly dispose of button/coin batteries.

Other Features (continued)

Rain Delay

- To adjust the timing of your rain sensor, this controller features a **RAIN DELAY** setting
- This allows a specific delay time to elapse after the rain sensor has dried out before the station will water again.

1. Turn the dial to **SENSOR**
2. Press ◀ to access the **RAIN DELAY** screen

- The **INTERVAL DAYS** value will now be flashing

3. Use + or − to alter the rain delay time in increments of 24 hours at a time

- A maximum delay of 9 days can be set

Pump Connection

- This unit will allow stations to be assigned to a pump
- The default position is that all stations are assigned to **PUMP A**

1. To change individual stations, turn the dial to **PUMP**
2. Press ▶ to cycle through each station
3. Use + or − to toggle **PUMP A** to **ON** or **OFF** respectively

Display Contrast

1. To adjust the LCD contrast, turn the dial to **PUMP**
2. Press P repeatedly until the display reads **CON**
3. Use + or − to adjust the display contrast as desired
4. To save your setting, turn the dial back to **AUTO**

Water Budgeting and Seasonal Adjustment

- Automatic station **RUN TIMES** can be adjusted by percentage as the seasons change
- This will save valuable water as **RUN TIMES** can be adjusted quickly in spring, summer, and autumn to reduce or increase water usage
- For this function, it is important to set the calendar correctly–see ***Set Current Time, Day and Date*** for more details

1. Turn the dial to **BUDGET**–the display will appear as follows:

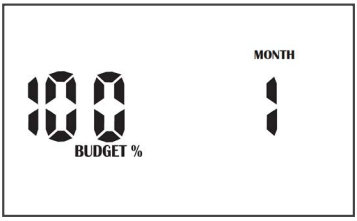

- This means the **RUN TIMES** are set to a **BUDGET%** of 100%
- By default, the display will show the current **MONTH**
- For example, if **STATION No. 1** is set to 10 minutes then it will run for 10 minutes
- If the **BUDGET%** changes to 50%, **STATION No. 1** would now run for 5 minutes (50% of 10 minutes
- The budget calculation is applied to all active **STATIONS** and **RUN TIMES**

2. Use ◀ or ▶ to cycle through the months **1** to **12**
3. Use + or − to adjust the **BUDGET%** in 10% increments for each month

- This can be set for each month from **OFF** to **200%**
- The permanent memory function will retain the information

4. To return to the clock, turn the dial to **AUTO**
5. If the **BUDGET%** for your current month is not **100%**, this will be shown in the **AUTO** clock display

Other Features (continued)

Fault Indication Feature

This unit has a M205 1AMP glass fuse to protect the transformer from power surges, and an electronic fuse to protect the circuit from field or valve faults

The following fault indications can be displayed:

NO AC: Not connected to mains power or transformer not working

FAULT BAT: 9V battery not connected or needs to be replaced

System Test

1. Turn the dial to **TEST STATIONS**

The system test will begin automatically

Your ***PRO469*** will water every station sequentially for 2 minutes each

2. Press ▶ to advance to the next station before the 2 minute period has elapsed

It is not possible to go backwards to a previous station

To restart the system test from **STATION No. 1**, turn the dial to **OFF**, and then back to **TEST STATIONS**

Clearing the Programs

As this unit has a permanent memory feature, the best way to clear the **PROGRAMS** is as follows:

3. Turn the dial to **OFF**
4. Press ▶ twice until the display appears as follows:

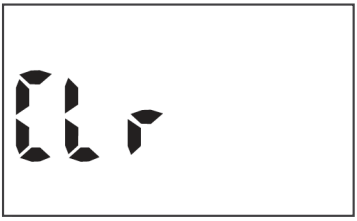

5. Press P to clear all **PROGRAMS**

The clock will be retained, and the other functions for setting **START TIMES**, **WATERING DAYS** and **RUN TIMES** will be cleared and returned to the start up settings

PROGRAMS can also be cleared by manually setting **START TIMES**, **WATERING DAYS** and **RUN TIMES** individually back to their defaults

Program Rescue Feature

1. To upload Program Recall Feature turn the dial to **OFF** and press ◀ and ▶ simultaneously– **LOAD UP** will appear on the screen
2. Press P to complete the process

To re-install Program Recall Feature turn the dial **OFF** and press ▶

LOAD will appear on the screen

Press P to return to the original stored program

Installation

Mounting the Controller

- Install the controller near a 240VAC outlet–preferably in a house, garage, or exterior electrical cubicle
- For ease of operation, eye level placement is recommended
- Ideally, your controller location should not be exposed to rain or areas prone to flooding or heavy water
- This inbuilt controller comes with an internal transformer and is suitable for outdoor or indoor installation
- The housing is designed for outdoor installation but the plug needs to be installed in a weatherproof socket or under cover
- Fasten the controller using the key hole slot positioned externally on the top centre and the additional holes positioned internally under the terminal cover

Electrical Hook-up

- **All electrical work must be carried out in accordance with these instructions, following all applicable local, state and federal codes pertaining to the country of installation–failure to do so will void the controller's warranty**
- **Disconnect mains power supply before any maintenance work to the controller or valves is undertaken**
- **Do not attempt to wire any high voltage items yourself, i.e. pumps and pump contactors or hard wiring the controller power supply to the mains–this is the field of a licensed electrician**
- **Serious injury or death could result from improper hook up–if in doubt consult your regulatory body as to what is required**

Field Wiring Connections

1. Prepare wire for hook-up by cutting the wires to the correct length and stripping approximately 0.25 inches (6.0mm) of insulation from the end to be connected to the controller
2. Ensure terminal block screws are loosened sufficiently to permit easy access for wire ends
3. Insert stripped wire ends into the clamp aperture and tighten screws

- Do not over tighten as this may damage the terminal block
- A maximum of 0.75 amps may be supplied by any output

4. Check the inrush current of your solenoid coils before connecting more than two valves to any one station

Power Supply Connections

- It is recommended that the transformer is not connected to a 240VAC supply which is also servicing or supplying motors (such as air conditioners, pool pumps, refrigerators)
- Lighting circuits are suitable as power sources

Installation (continued)

Terminal Block Layout

1. **24VAC** 24VAC power supply connection
2. **COM** Common wire connection to field wiring
3. **SENS** Input for rain switch
4. **PUMP 1** Master valve or pump start output
5. **ST1–ST9** Station (valve) field connections

Use a 2 amp fuse

Valve Installation and Power Supply Connection

The purpose of the master valve is to shut off the water supply to the irrigation system when there is a faulty valve or none of the stations are operating correctly

It is used like a back-up valve or fail safe device and is installed at the start of the irrigation system where it is connected to the water supply line

Installation (continued)

Station Valve Installation

- Up to two 24VAC solenoid valves can be connected to each station output and wired back to the Common (**C**) connector
- With long cable lengths, voltage drop can be significant, especially when more than one coil is wired to a station
- As a good rule of thumb select your cable as follows: 0–50m cable dia 0.5mm
  - 50–100m cable dia 1.0mm
  - 100–200m cable dia 1.5mm
  - 200–400m cable dia 2.0mm
- When using multiple valves per station, the common wire needs to be larger to carry more current. In these circumstances choose a common cable one or two sizes larger than required
- When making connections in the field, only ever use gel filled or greased filled connectors. Most field failures occur due to poor connections. The better the connection here, and the better the waterproof seal the longer the system will perform without trouble
- To install a rain sensor, wire it between the Common (**C**) and the Rain Sensor (**R**) terminals as shown

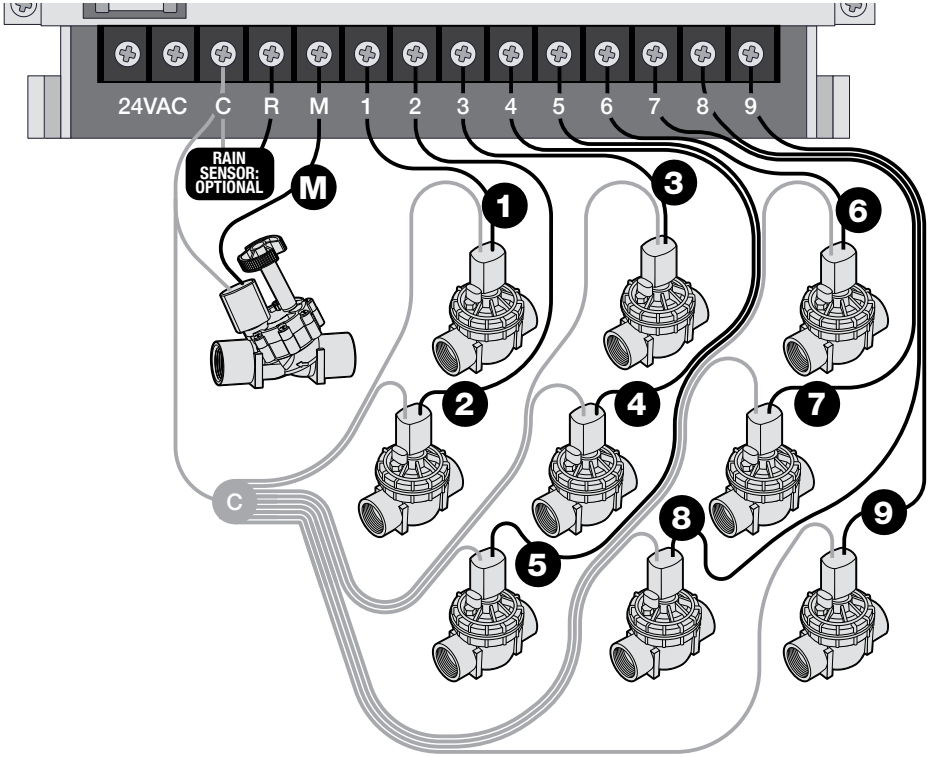

Installation (continued)

Pump Start Relay Connection

- This controller does not provide mains power to drive a pump–a pump must be driven via an external relay and contactor setup.
- The controller provides a low voltage signal that actuates the relay which in turn enables the contactor and finally the pump
- Although the controller has permanent memory and thus a default program will not cause erroneous valve actuation as in some controllers, it is still good practice when using a system where the water supply comes from a pump to connect unused stations on the unit back to the last used station
- This in effect, inhibits the chances of the pump ever running against a closed head

Pump Protection (System Test)

- In some circumstances not all operational stations may be hooked up–for example, if the controller was capable of running 6 stations but there were only 4 field wires and solenoid valves available for connection
- This situation can pose a risk to a pump when the system test routine for the controller is initiated
- The system test routine sequences through all available stations on the controller
- In the above example this would mean stations 5 through to 6 would become active and would cause the pump to operate against a closed head
- **This could possibly cause permanent pump, pipe and pressure vessel damage**
- It is mandatory if the system test routine is going to be used, that all unused, spare stations, should be linked together and then looped to the last working station with a valve on it
- Using this example, the connector block should be wired as per the diagram below

Single Phase Pump Installation

- It is recommended to always use a relay between the controller and the pump starter

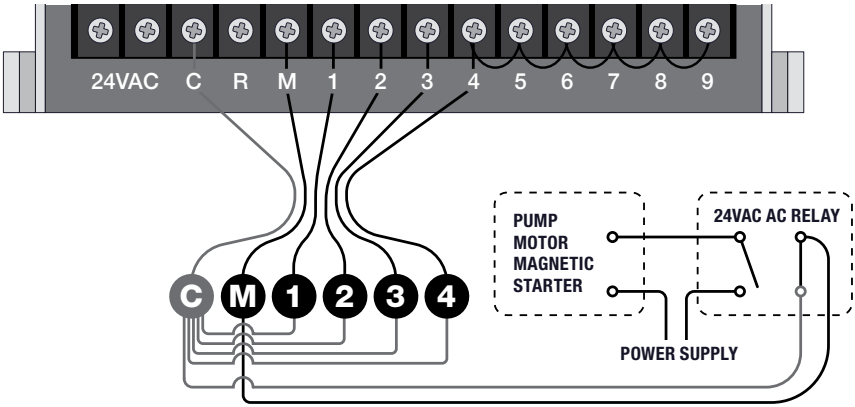

Troubleshooting

Symptom	Possible Cause	Suggestion
No display	Faulty transformer or blown fuse	Check fuse, check field wiring, check transformer
Single station not working	Faulty solenoid coil, or break in field wire Check fault indicator in display	Check solenoid coil (a good solenoid coil should read around 33ohms on a multi meter). Test field cable for continuity. Test Common cable for continuity
No automatic start	Programming error or blown fuse or transformer	If unit works manually then check the programming. If not then check the fuse, wiring and transformer.
Buttons not responding	Short on button or programming not correct. Unit may be in sleep mode and no AC power	Check instruction book to ensure programming is correct. If buttons still not responding then return panel to supplier or manufacturer
System coming on at random	Too many start times entered on automatic programs	Check number of start times entered on each program. All stations will run once for every start. If fault persists return panel to supplier
Multiple stations running at once	Possible faulty driver triac	Check wiring and swap faulty station wire's on the controller terminal block with known working stations. If the same outputs are still locked on, return panel to supplier or manufacturer
Pump start chattering	Faulty relay or pump contactor	Electrician to check voltage on relay or contactor
Display cracked or missing segments	Display damaged during transportation	Return panel to supplier or manufacturer
Sensor input not working	Sensor enable switch in the OFF position or faulty wiring	Slide switch on front panel to the ON position, test all wiring and make sure the sensor is a normally closed type. Check programming to make sure sensor is enabled
Pump not working on a specific station or program	Programming error with pump enable routine	Check programming, using the manual as a reference and correct mistakes

Electrical Specifications

Electrical Outputs

Power Supply

- Mains supply: This unit runs off a 240 volt 50 hertz single phase outlet
- The controller draws 30 watt at 240VAC
- The internal transformer reduces the 240VAC to an extra low voltage supply of 24VAC
- The internal transformer is fully compliant with AS/NZS 61558-2-6 and has been independently tested and judged to comply
- This unit has a 1.25AMP low energy, high efficient toroidal transformer for long life performance

Electrical Power Supply:

- Input 24 volts 50/60Hz

Electrical Outputs:

- Maximum of 1.0 amp

To Solenoid Valves:

- 24VAC 50/60Hz 0.75 amps max
- Up to 2 valves per station on the inbuilt model

To the Master Valve/Pump Start:

- 24VAC 0.25 amps max
- Transformer and fuse capacity must be compatible with output requirements

Overload Protection

- Standard 20mm M-205 1 amp fast blow glass fuse, protects against power surges and electronic fuse rated to 1AMP protects against field faults
- Faulty station skip function

Power Failure

- The controller has permanent memory and real time clock, so the data is always backed up even with the absence of all power
- The unit is factory fitted with a 3V CR2032 lithium battery with up to 10 years memory backup
- The 9V alkaline battery maintains the data during power outages, and is recommended to help maintain the life of the lithium battery
- **Tampering with the unit will void the warranty**
- The batteries do not run the outputs. The internal transformer requires mains power to run the valves

Wiring

- Output circuits should be installed and protected in accordance with wiring code for your location

Servicing

Servicing your Controller

The controller should always be serviced by an authorised agent. Follow these steps to return your unit:

1. Turn the mains power off to the controller

If the controller is hard-wired, a qualified electrician will be required to remove the entire unit, depending on the fault

2. Proceed to either unplug and return the entire controller with transformer or disconnect the panel assembly only for servicing or repair
3. Disconnect the 24VAC leads at the controller 24VAC terminals on the very left hand side of the terminal block
4. Clearly mark or identify all valve wires according to the terminals they are connected to, (1–9)

This allows you to easily wire them back to the controller, maintaining your valve watering scheme

5. Disconnect valve wires from the terminal block
6. Remove the complete panel from the controller housing by unscrewing the two screws in the lower corners of the fascia (both ends of the terminal block)
7. Remove the complete controller from the wall unplugging the lead
8. Carefully wrap the panel or controller in protective wrapping and pack in a suitable box and return to your service agent or the manufacturer

Tampering with the unit will void the warranty.

9. Replace your controller panel by reversing this procedure.

The controller should always be serviced by an authorised agent

Warranty

3 Year Replacement Guarantee

Holman offers a 3 year replacement guarantee with this product.

In Australia our goods come with guarantees that cannot be excluded under the Australian Consumer Law. You are entitled to a replacement or refund for a major failure and compensation for any other reasonably foreseeable loss or damage. You are also entitled to have the goods repaired or replaced if the goods fail to be of acceptable quality and the failure does not amount to a major failure.

As well as your statutory rights referred to above and any other rights and remedies you have under any other laws relating to your Holman product, we also provide you with a Holman guarantee.

Holman guarantees this product against defects caused by faulty workmanship and materials for 3 years domestic use from the date of purchase. During this guarantee period Holman will replace any defective product. Packaging and instructions may not be replaced unless faulty.

In the event of a product being replaced during the guarantee period, the guarantee on the replacement product will expire 3 years from the purchase date of the original product, not 3 years from the date of replacement.

To the extent permitted by law, this Holman Replacement Guarantee excludes liability for consequential loss or any other loss or damage caused to property of persons arising from any cause whatsoever. It also excludes defects caused by the product not being used in accordance with instructions, accidental damage, misuse, or being tampered with by unauthorised persons, excludes normal wear and tear and does not cover the cost of claiming under the warranty or transporting the goods to and from the place of purchase.

Should you suspect your product may be defective and need some clarification or advice please contact us directly:

1300 716 188
support@holmanindustries.com.au
11 Walters Drive, Osborne Park 6017 WA

If you are certain your product is defective and is covered by the terms of this warranty, you will need to present your defective product and your purchase receipt as proof of purchase to the place you purchased it from, where the retailer will replace the product for you on our behalf.

Thanks for being a #SMARTGARDENER

We really appreciate having you as a customer, and would like to say thank you for choosing us.

We recommend registering your new product on our website. This will ensure we have a copy of your purchase and activate an extended warranty. Keep up to date to with relevant product information and special offers available through our newsletter.

www.holmanindustries.com.au/product-registration/

Thanks again for choosing Holman

HOLMAN

For the #SMARTGARDENER